BETA RICAMBI

Tel. 081 8507823 / 8638945 - Fax 081 8500351

FIAT OM40

040/370 -

0015
24x36x75
lt.56

130/435

MTP15A alluminio
MTP15 plastica

NG062 guarnizione
NP008 vetro parabrezza

040/220 d/rh
040/221 s/lh

040/102

SAD106

40/103

50Z/130

040/228 d/rh
040/229 s/lh *

040/ 2 d/rh
040/ 3 s/lh

040/130

50Z/131

040/320 d/rh
040/321 s/lh

040/224 d/rh
040/225 s/lh *

040/216 d/rh
040/217 s/lh

040/200 d/rh
040/201 s/lh

NB005 d/rh
NB005S s/lh

040/230 d/rh
040/231 s/lh

040/ 90

040/ 95
plastica

040/214 d/rh
040/215 s/lh
plastica

COVIND

* Materiale su Ordinazione
\- Articolo esaurito

FIAT OM40 - LUPETTO

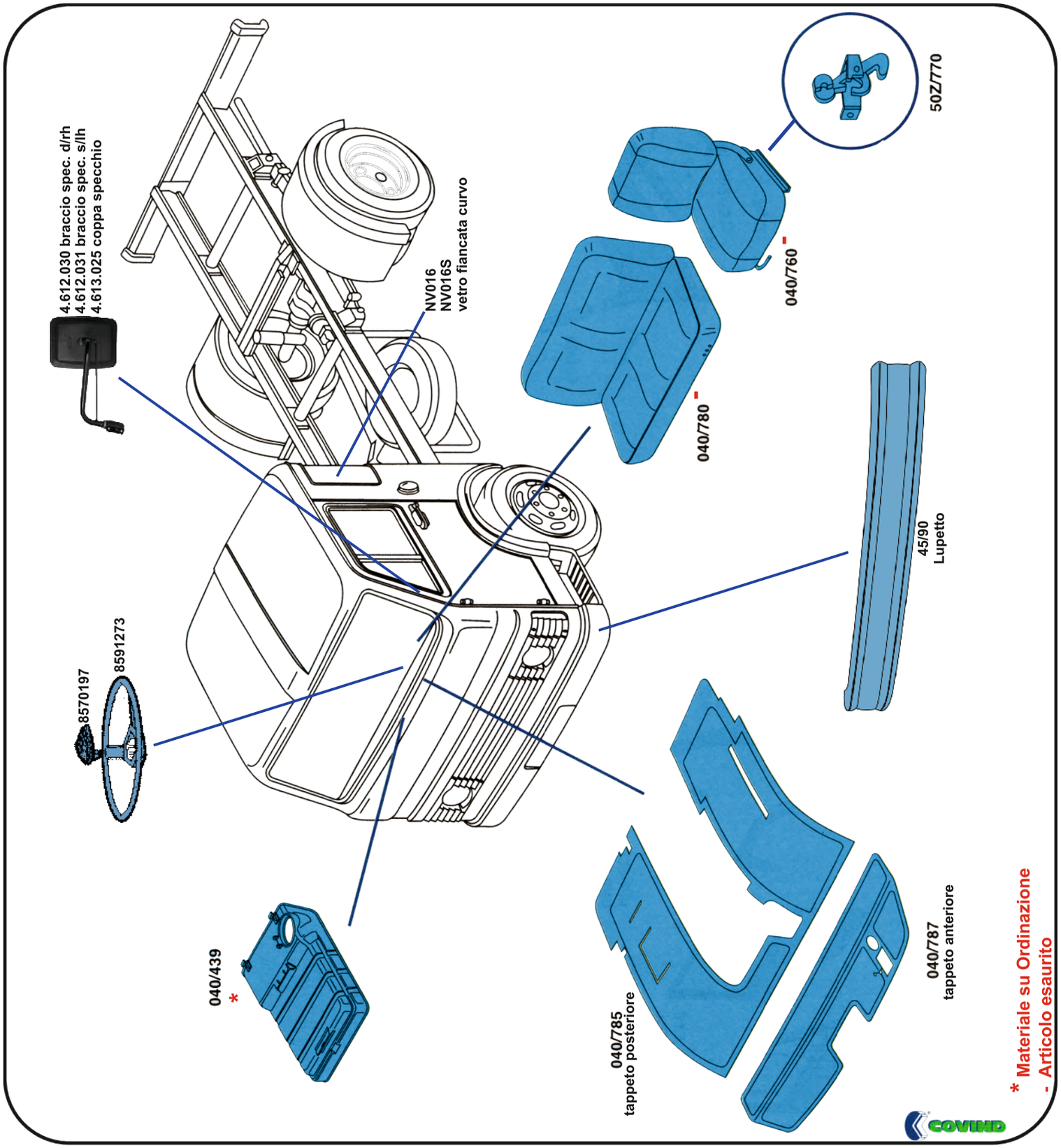

FIAT OM40

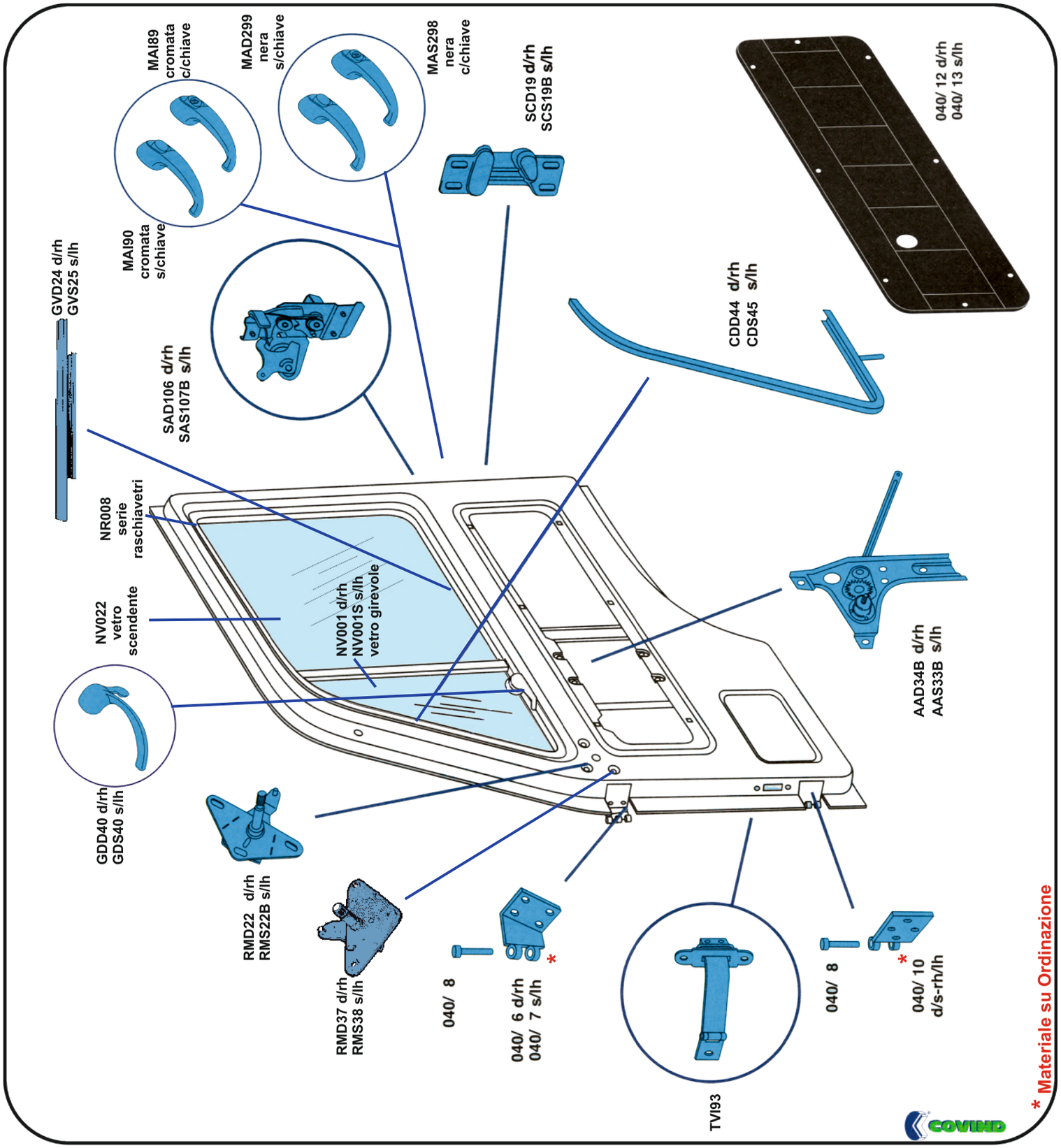
MAI89 cromata c/chiave
MAD299 nera s/chiave
MAS298 nera c/chiave
SCD19 d/rh SCS19B s/lh
040/ 12 d/rh 040/ 13 s/lh
MAI90 cromata s/chiave
GVD24 d/rh GVS25 s/lh
SAD106 d/rh SAS107B s/lh
CDD44 d/rh CDS45 s/lh
NR008 serie raschiavetri
NV022 vetro scendente
NV001 d/rh NV001S s/lh vetro girevole
AAD34B d/rh AAS33B s/lh
GDD40 d/rh GDS40 s/lh
RMD22 d/rh RMS22B s/lh
RMD37 d/rh RMS38 s/lh
040/ 8
040/ 6 d/rh 040/ 7 s/lh *
TVI93
040/ 8
040/ 10 d/s-rh/lh *
* Materiale su Ordinazione
COVIND

BETA RICAMBI
Tel. 081 8507823 / 8638945 - Fax 081 8500351

FIAT OM50 - GAMMA Z

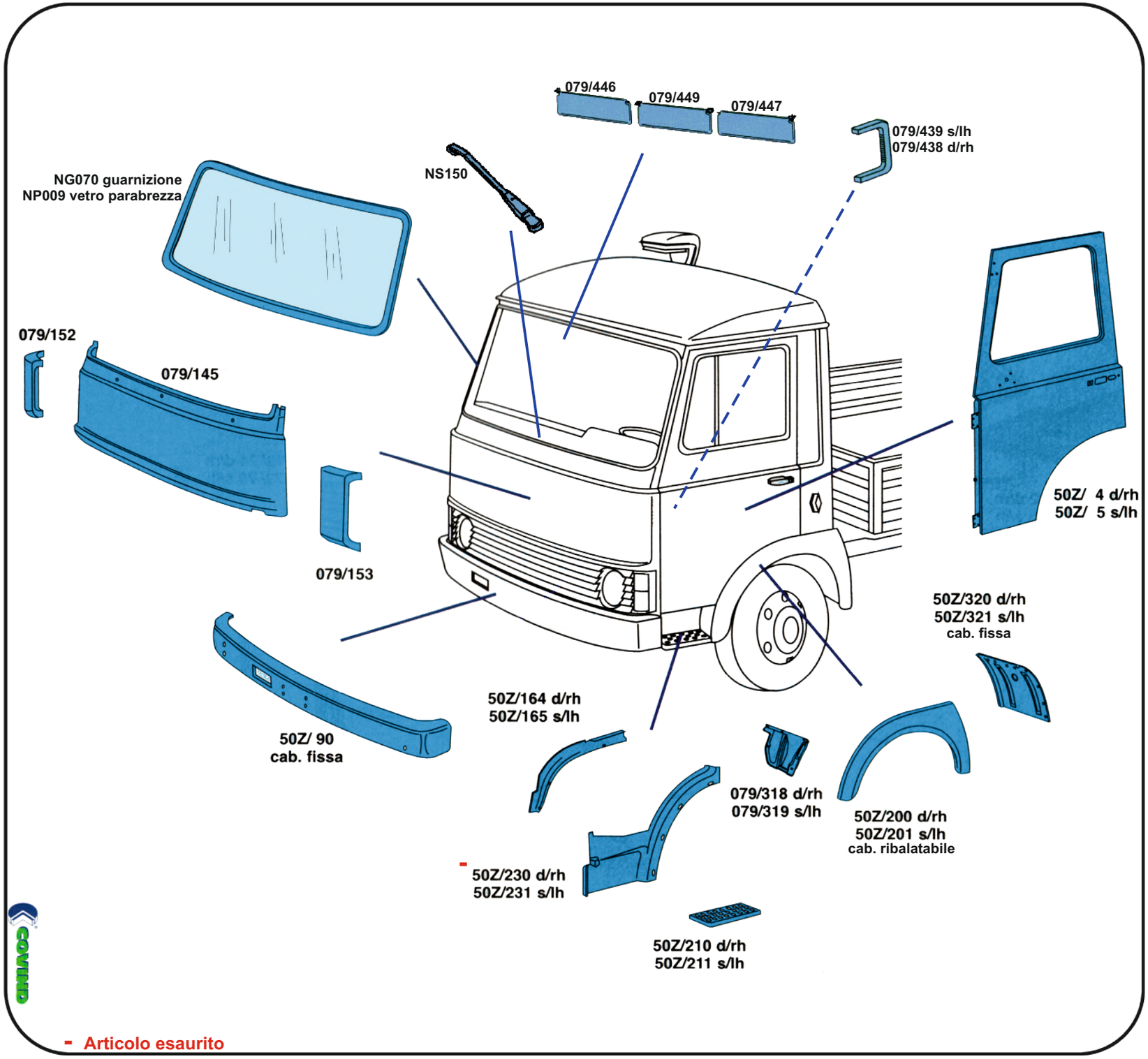

- Articolo esaurito

BETA RICAMBI

Tel. 081 8507823 / 8638945 - Fax 081 8500351

FIAT OM50 - GAMMA Z

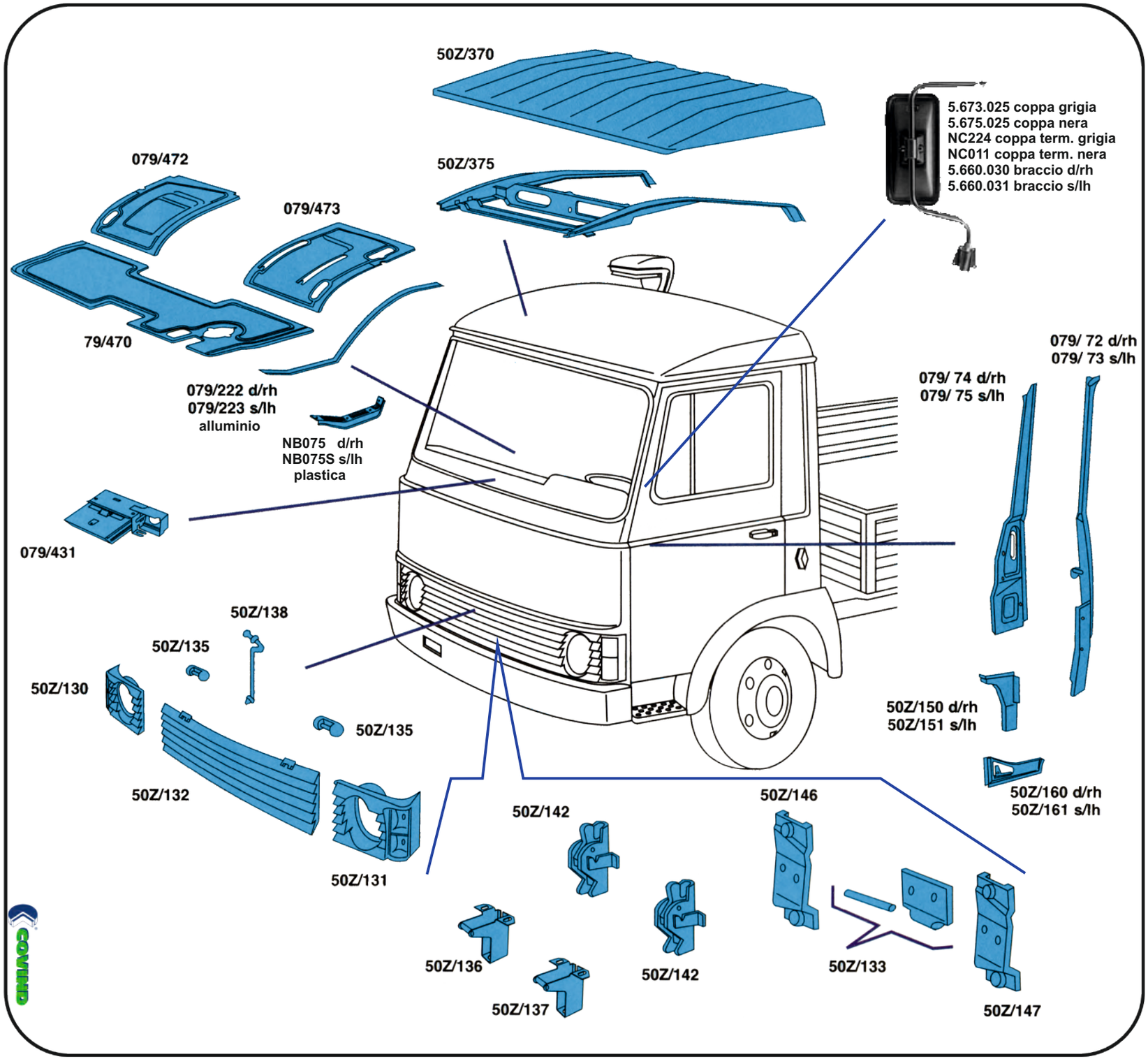

BETA RICAMBI
Tel. 081 8507823 / 8638945 - Fax 081 8500351

FIAT OM50 - GAMMA Z

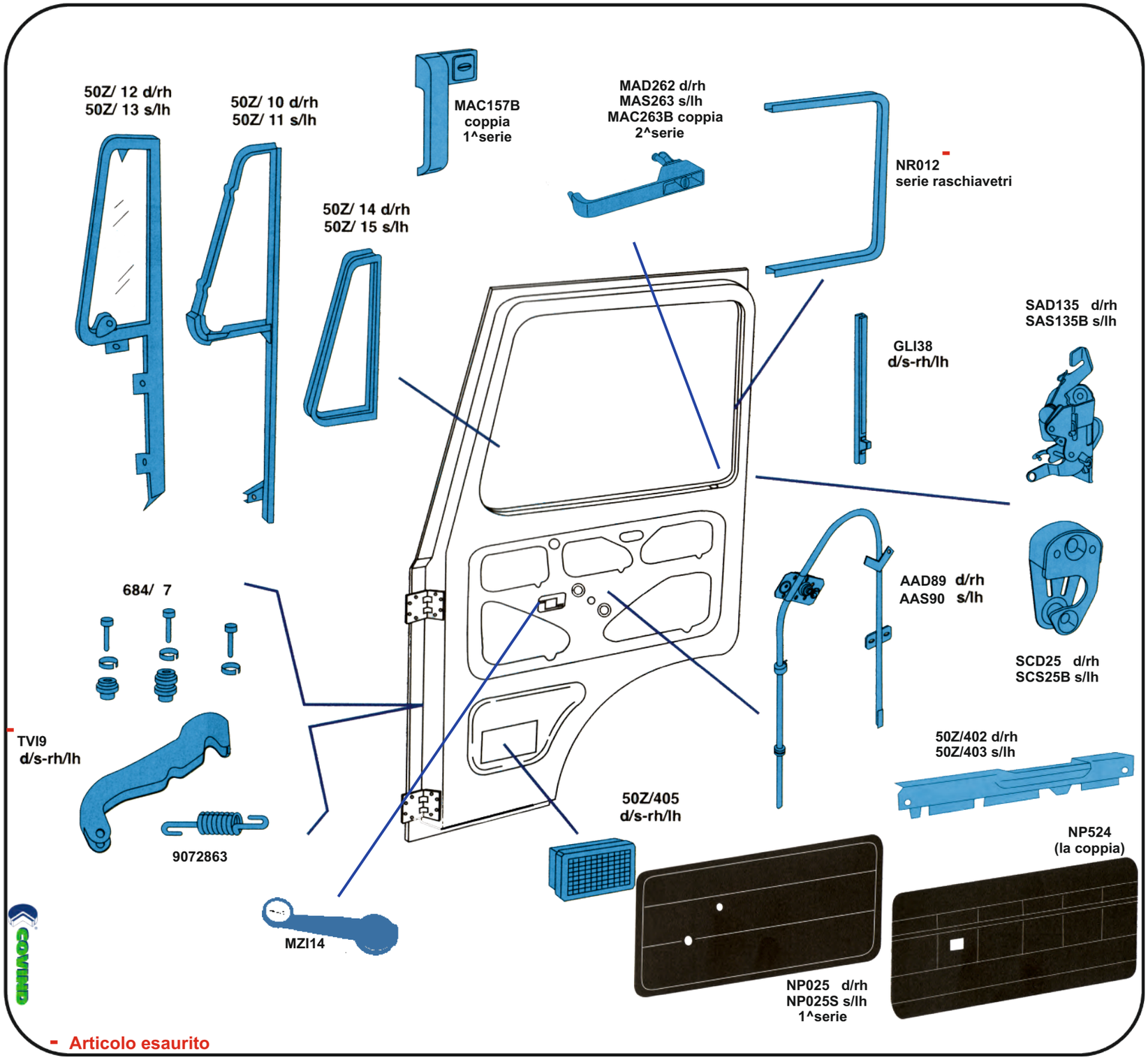

- Articolo esaurito

FIAT OM50 - GAMMA Z

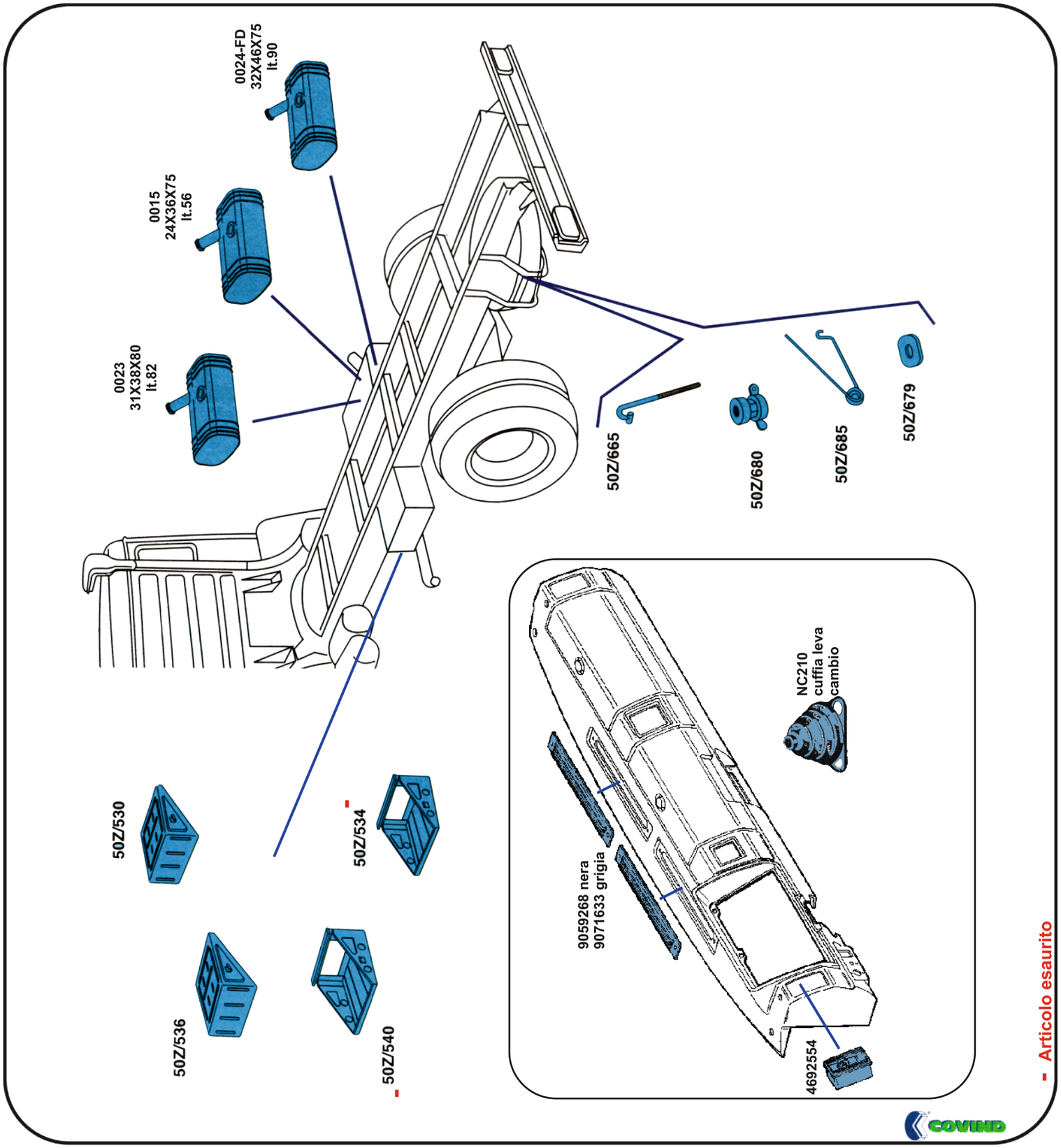

- Articolo esaurito

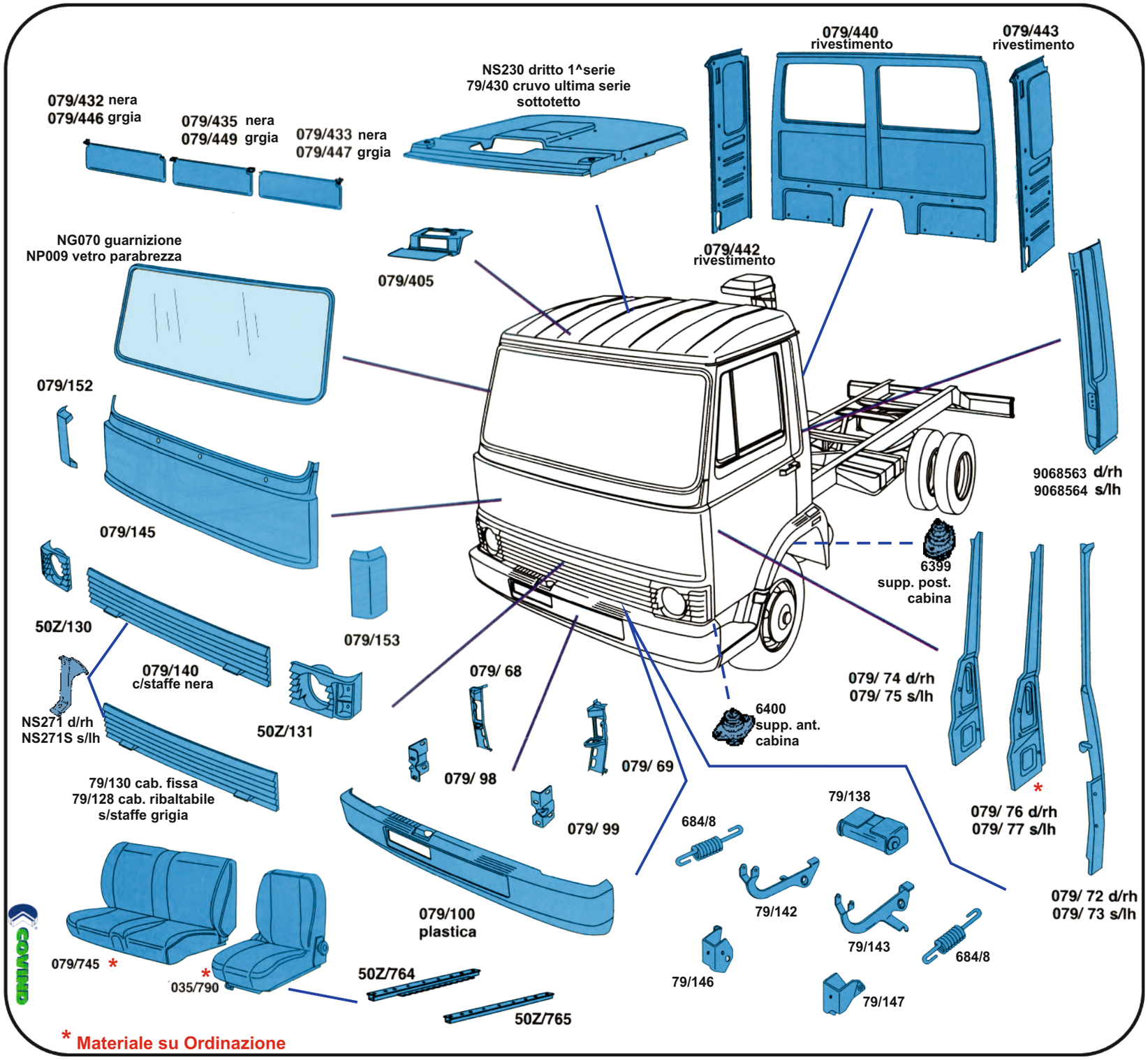

BETA RICAMBI
POMPEI s.a.s.
BETA RICAMBI
Tel. 081 8507823 / 8638945 - Fax 081 8500351

FIAT OM50 - GAMMA Z

BETA RICAMBI

Tel. 081 8507823 / 8638945 - Fax 081 8500351

FIAT 79 - TURBOZETA

79/102 d/rh
79/103 s/lh

79/436 d/rh
79/437 s/lh

0024-FD
32X46X75
lt.90

0023
31X38X80
lt.82

5.675.025 coppa nera
NC224 coppa term. grigia
5.681.030 bracc. nero d/rh
5.681.031 bracc. nero s/lh
NB067 bracc. largo nero d/rh
NB067S bracc. largo nero s/lh

9072265 -

9070500 cab. fissa
9071763 cab. ribaltabile

9054218 d/rh
9054219 s/lh

6846

NC273

NB086

NM081 d/rh
NM081S s/lh

079/525

060/621

079/528

079/431

50-8
9068441

65-10
NS338

79-14
NS339

50-9
9070346

95-14
9068452

60-10
9068444

50-10
NS337

109-14
9068453

TurboZeta
79/117 piccola
79/118 grande

50Z/164 d/rh
50Z/165 s/lh

50Z/230 d/rh -
50Z/231 s/lh

79/472

79/473

NB075 d/rh
NB075S s/lh

079/210 d/rh
079/211 s/lh

COVIND

79/470

079/222 d/rh
079/223 s/lh

NG081
d/s-rh/lh

079/218 d/rh
079/219 s/lh

079/215
d/s-rh/lh

079/318 d/rh
079/319 s/lh

079/200 d/rh
079/201 s/lh

- Articolo esaurito

BETA RICAMBI
Tel. 081 8507823 / 8638945 - Fax 081 8500351

FIAT 79 - TURBOZETA

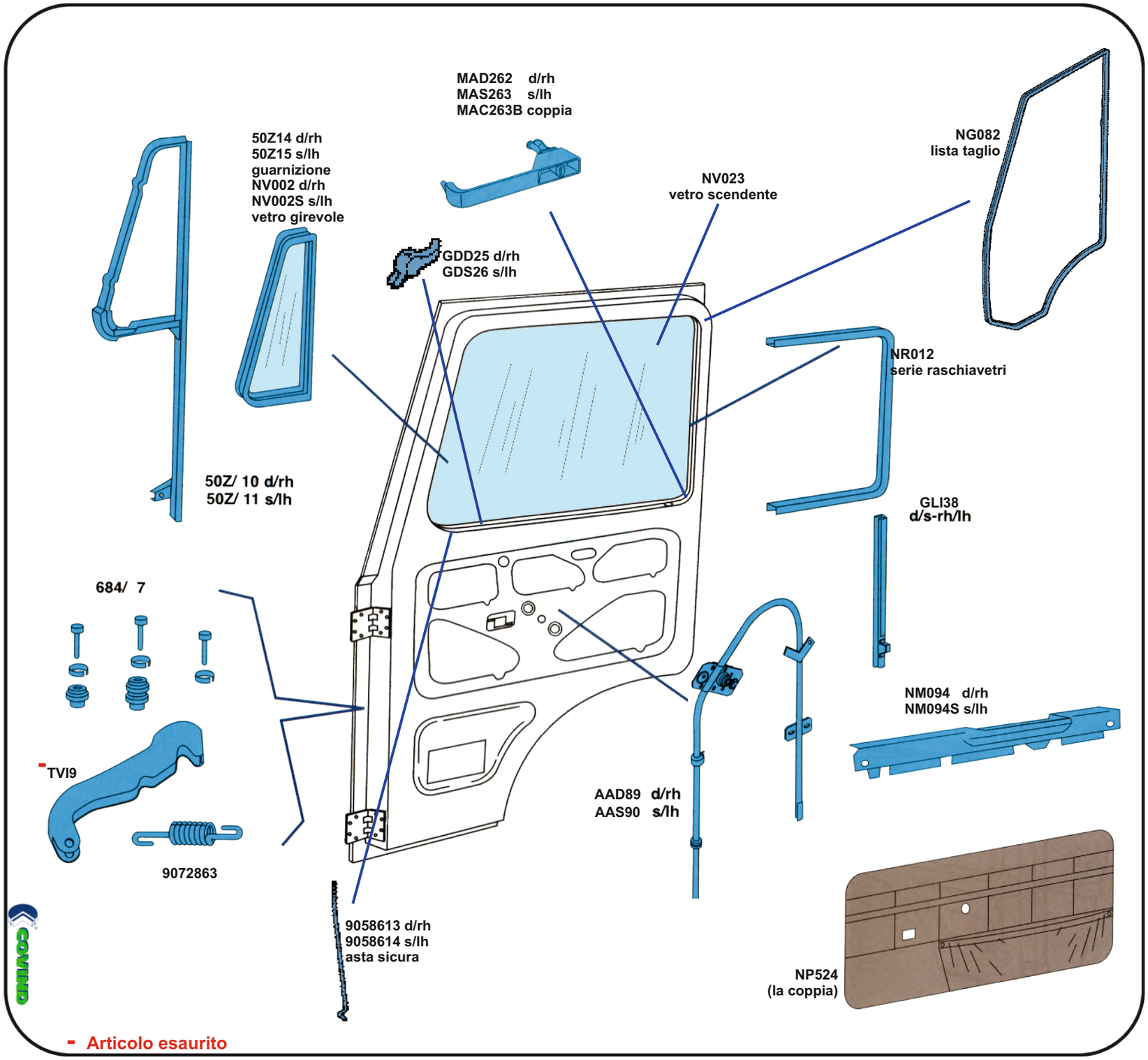

FIAT 79 - TURBOZETA

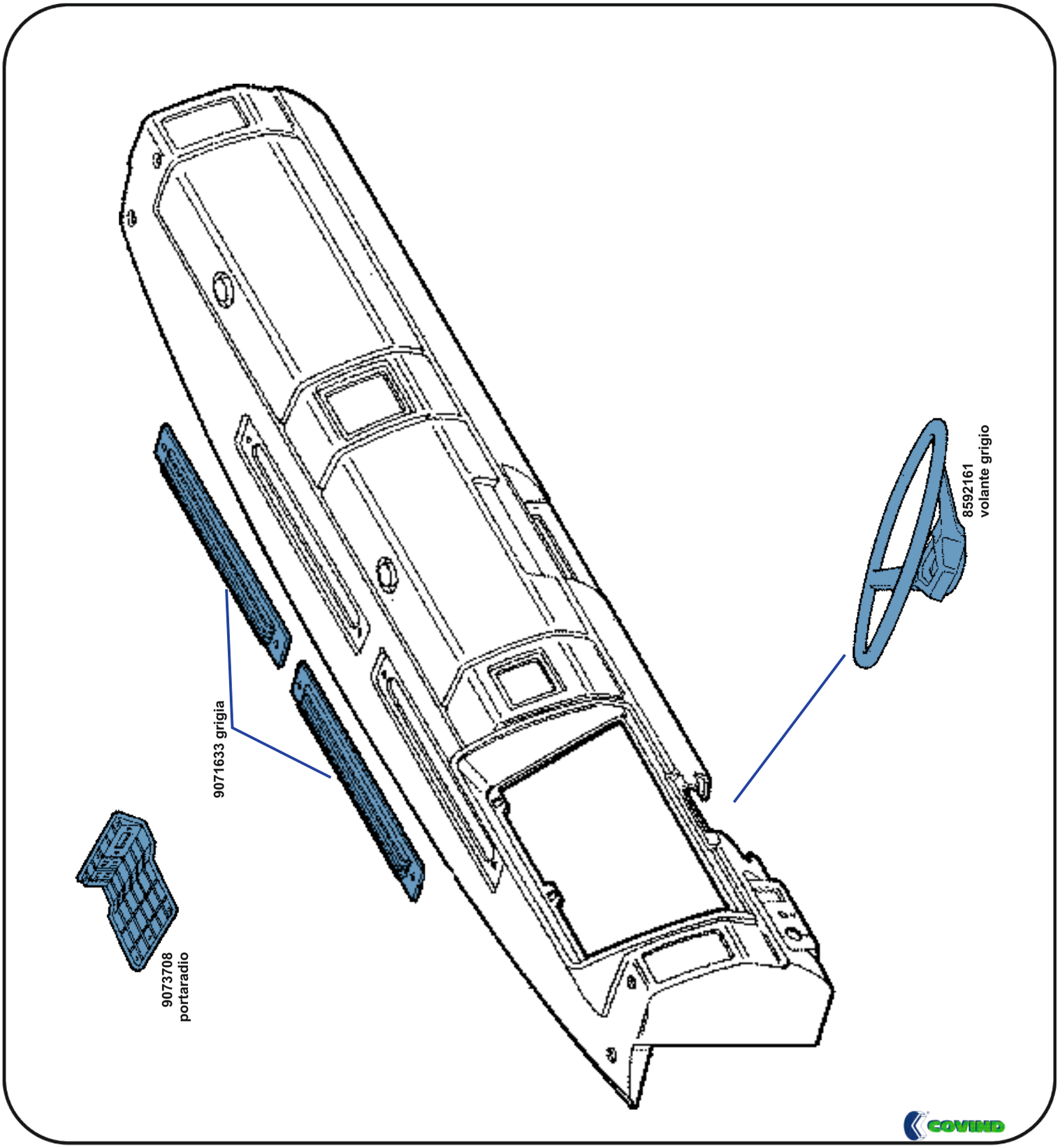

BETA RICAMBI
Tel. 081 8507823 / 8638945 - Fax 081 8500351

FIAT 110NC

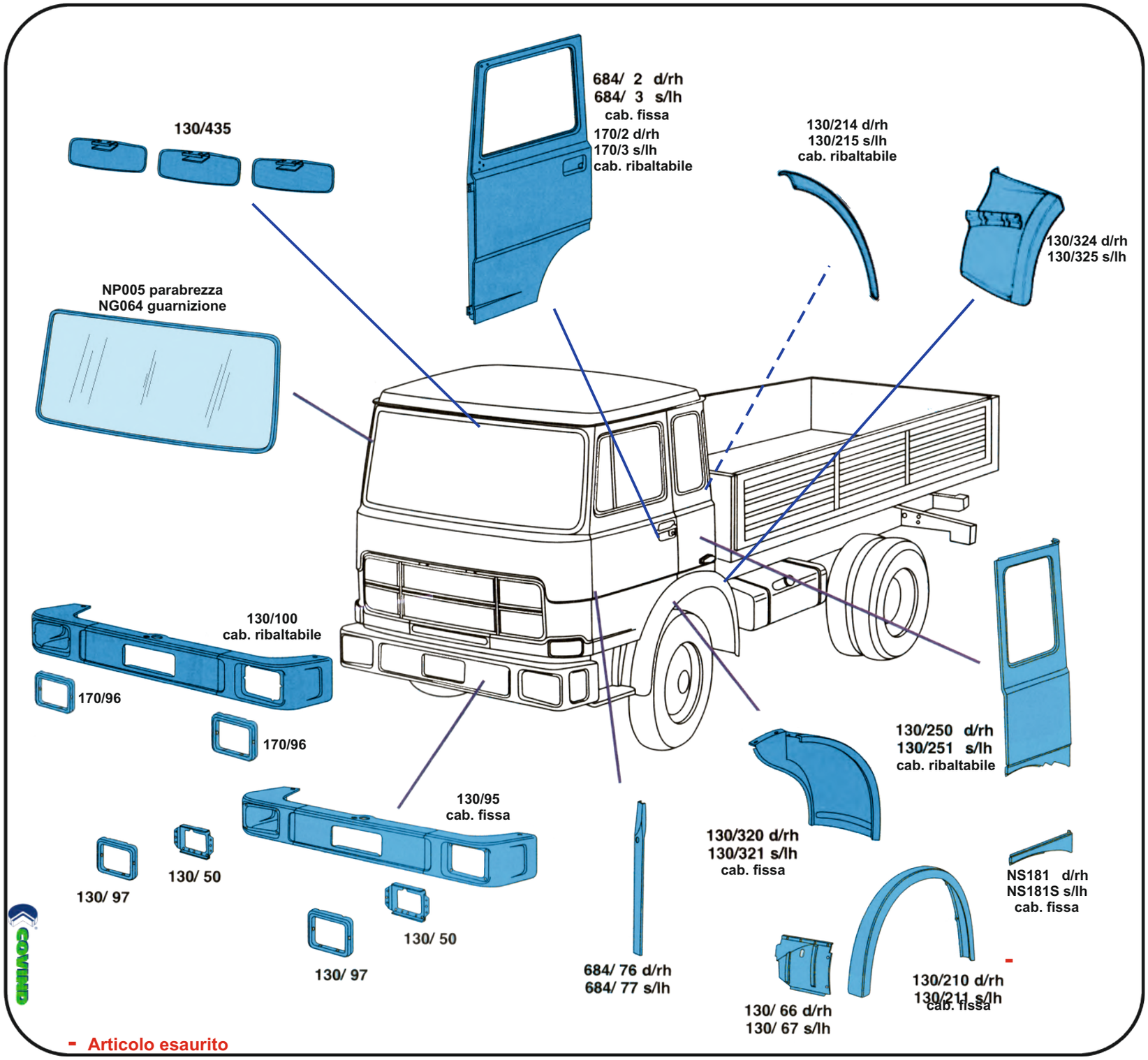

FIAT 115.17 - 135.17 - 145.17

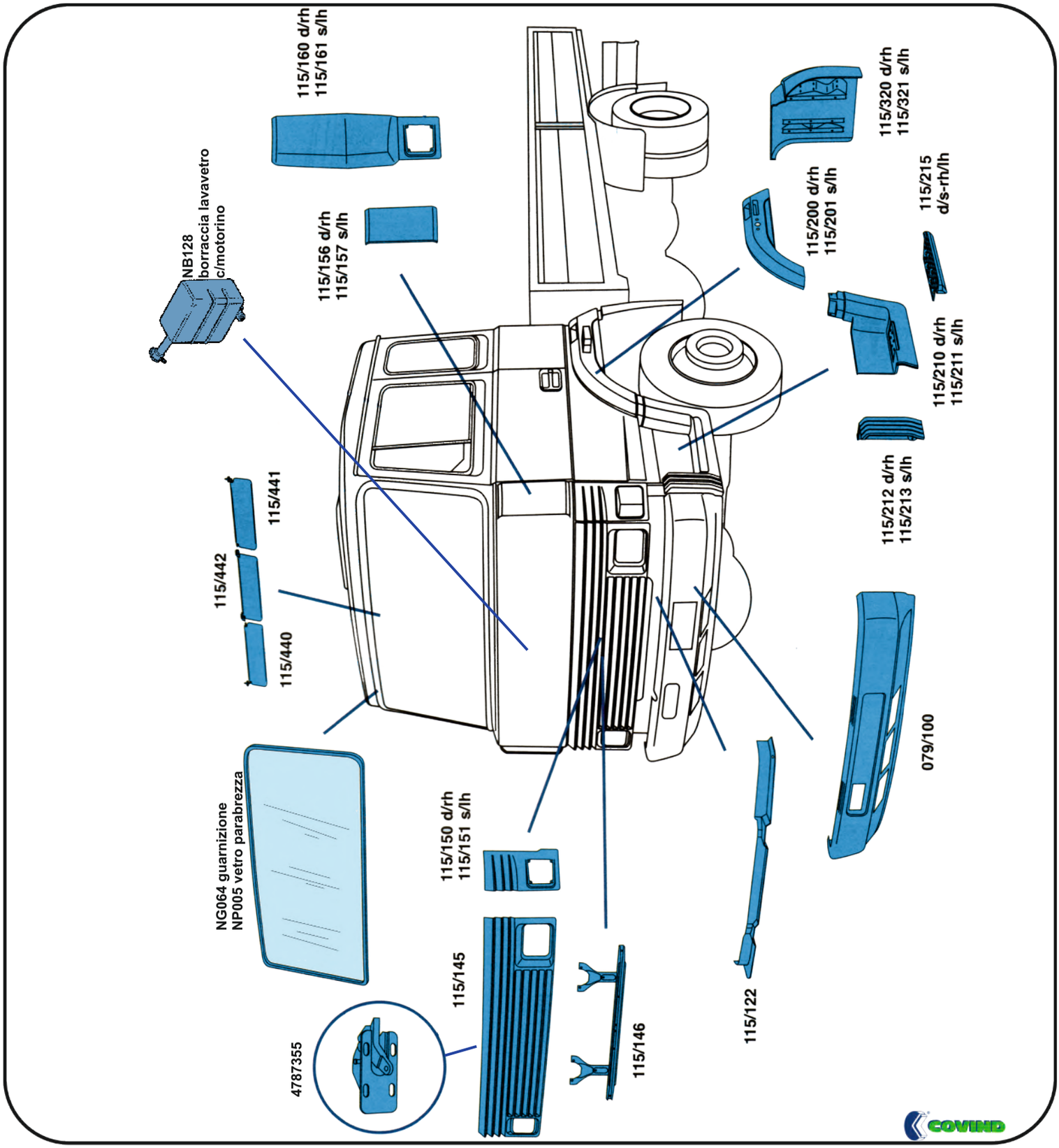

BETA RICAMBI
Tel. 081 8507823 / 8638945 - Fax 081 8500351

FIAT 115.17 - 135.17 - 145.17

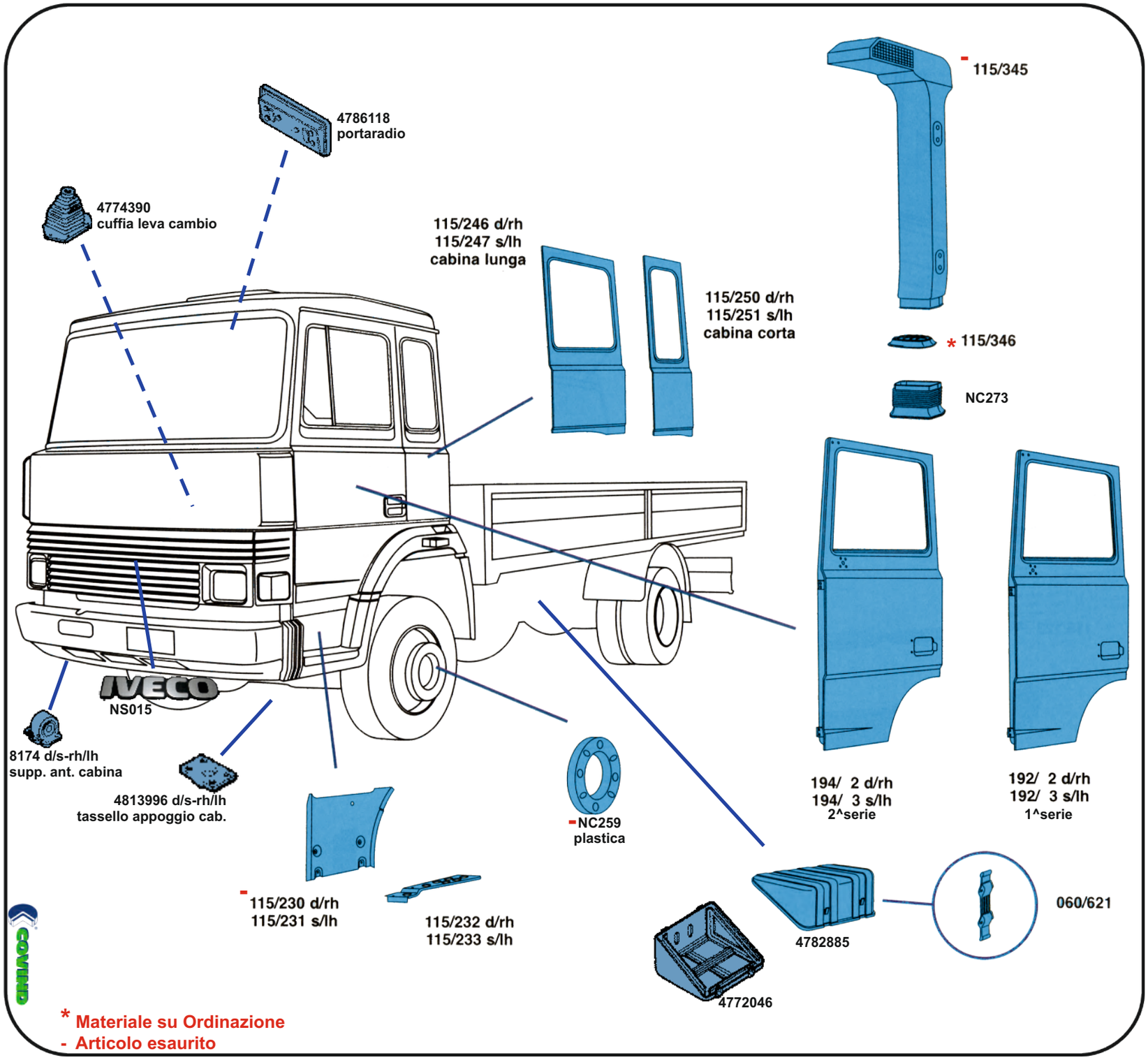

* Materiale su Ordinazione
\- Articolo esaurito

BETA RICAMBI
Tel. 081 8507823 / 8638945 - Fax 081 8500351

FIAT 175

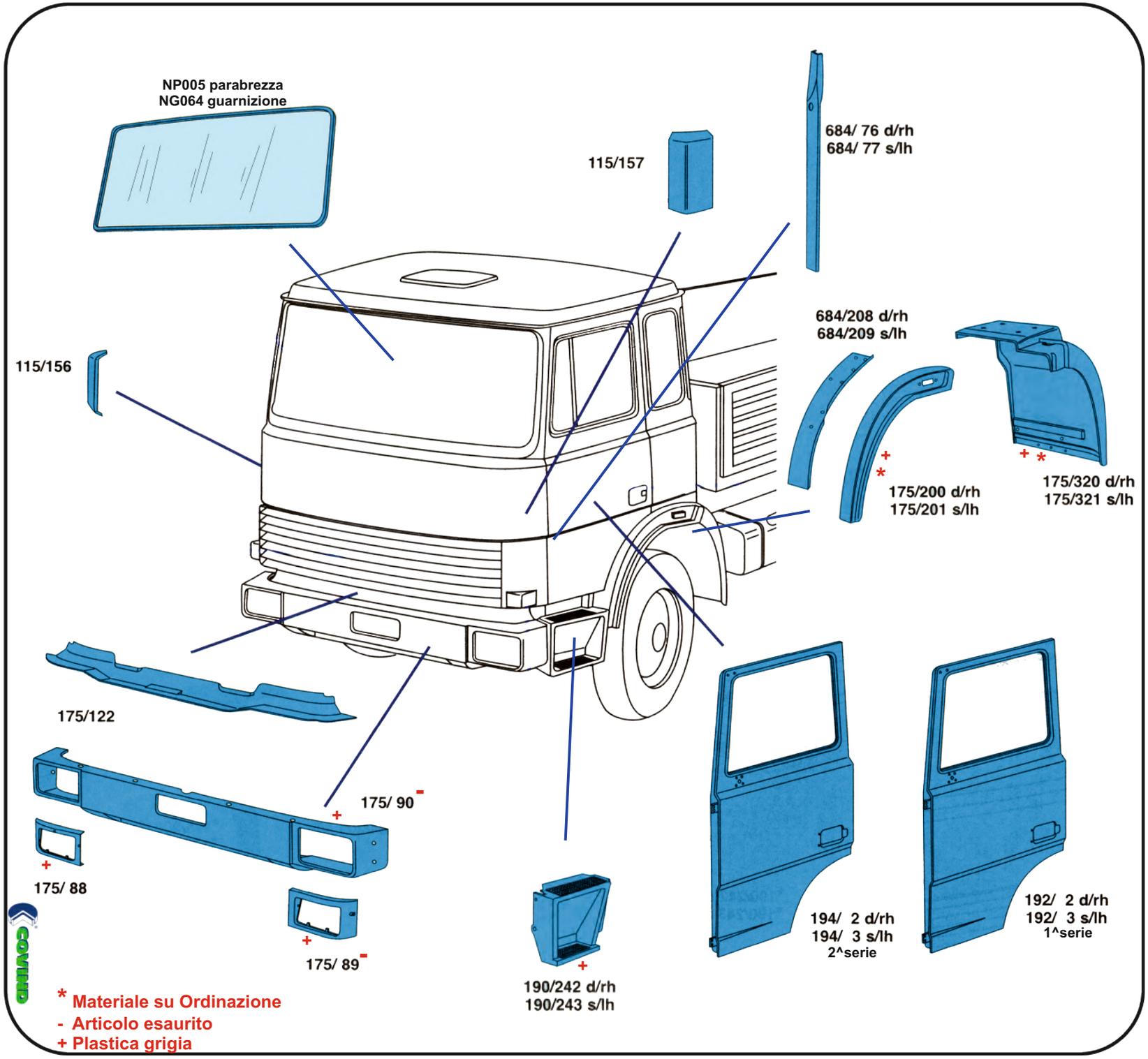

FIAT 115.17 - 135.17 - 145.17 - 175

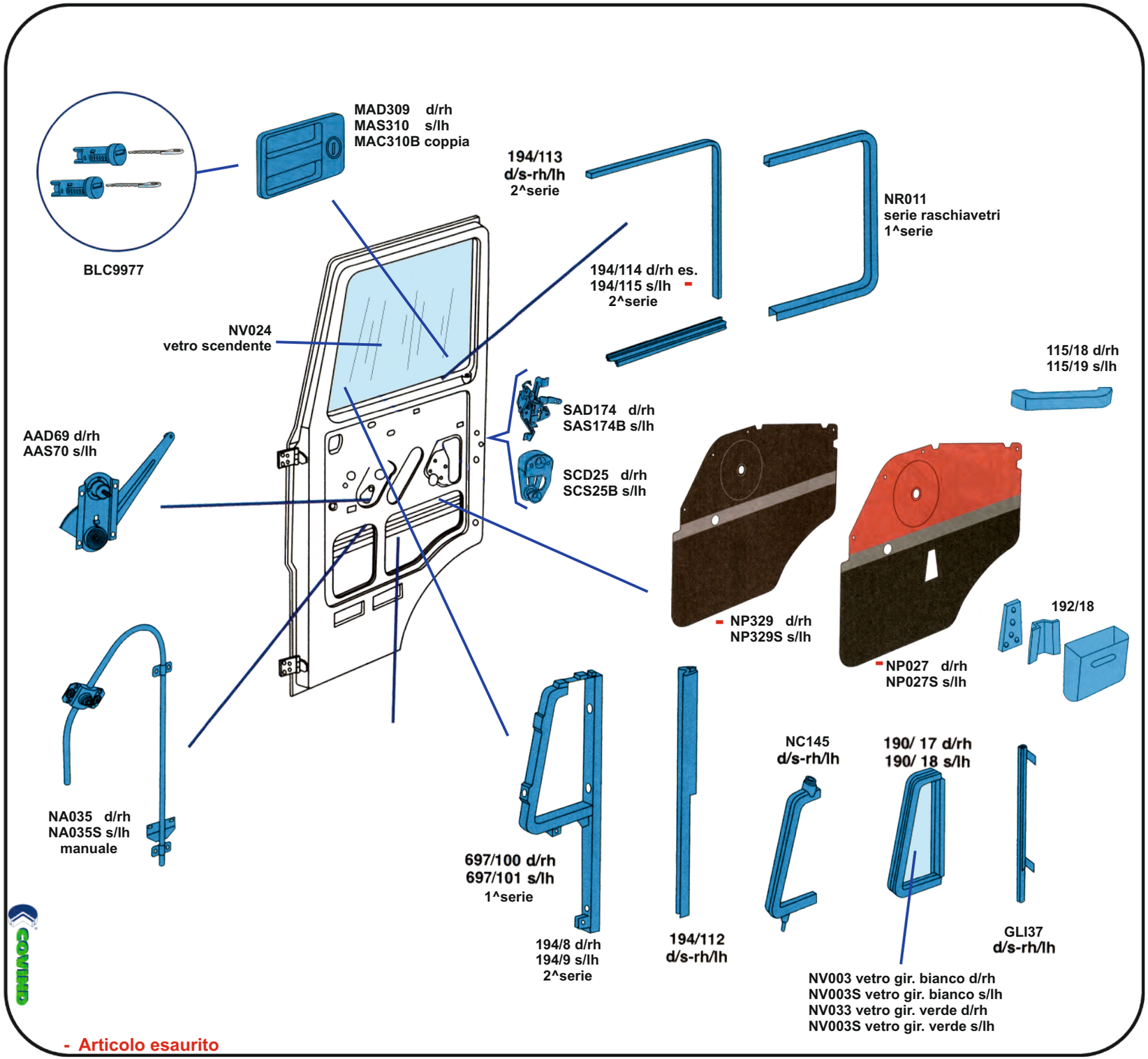

BETA RICAMBI

Tel. 081 8507823 / 8638945 - Fax 081 8500351

FIAT 619N1 - 684N

684/104

684/370 *

NP012 parabrezza NG069 guarnizione

684/108

684/52

684/102 d/rh
684/103 s/lh

684/426 d/rh
684/427 s/lh *

684/ 2 d/rh
684/ 3 s/lh

684/156 d/rh
684/157 s/lh

684/ 28 *

684/ 64 *

684/ 29 *

684/ 65 *

684/ 34

684/ 30

684/ 35

684/ 31

684/234 d/rh
684/235 s/lh

684/ 74 d/rh
684/ 75 s/lh

684/210 d/rh
684/211 s/lh

4719535 d/rh
4719536 s/lh

684/236 d/rh
684/237 s/lh

684/76 d/rh
684/77 s/lh

684/ 66 d/rh
684/ 67 s/lh

684/68

684/245
d/s-rh/lh

*684/ 94

684/ 90 *

684/ 97

684/ 92 *

684/ 95 *

684/ 97

684/ 91 *

COVIND

* Materiale su Ordinazione

BETA RICAMBI

Tel. 081 8507823 / 8638945 - Fax 081 8500351

FIAT 619N1 - 684N

684/141 scontro
684/140 serratura
684/242 d/rh
684/243 s/lh *
684/224 d/rh
684/225 s/lh *
684/240 d/s-rh/lh
NS140 d/rh
NS140S s/lh
684/330
684/331
684/384
684/385
6144
6145
6144
684/145 *
NV015 vetro fiancata
7820 guarnizione
* 684/134
* 684/135
684/184 d/rh
684/185 s/lh
cab. lunga
684/228 d/rh
684/229 s/lh
* 684/130
* 684/131
684/110 *
684/460 *
684/208 d/rh
684/209 s/lh
684/320 d/rh
684/321 s/lh *
* 684/324 d/rh
684/325 s/lh
684/214 d/rh
684/215 s/lh
684/316 d/rh
684/317 s/lh
684/619 *
NM019
COPERCHIO BATTERIA

COVIND

* Materiale su Ordinazione
\- Articolo esaurito

FIAT 691N - 180NC

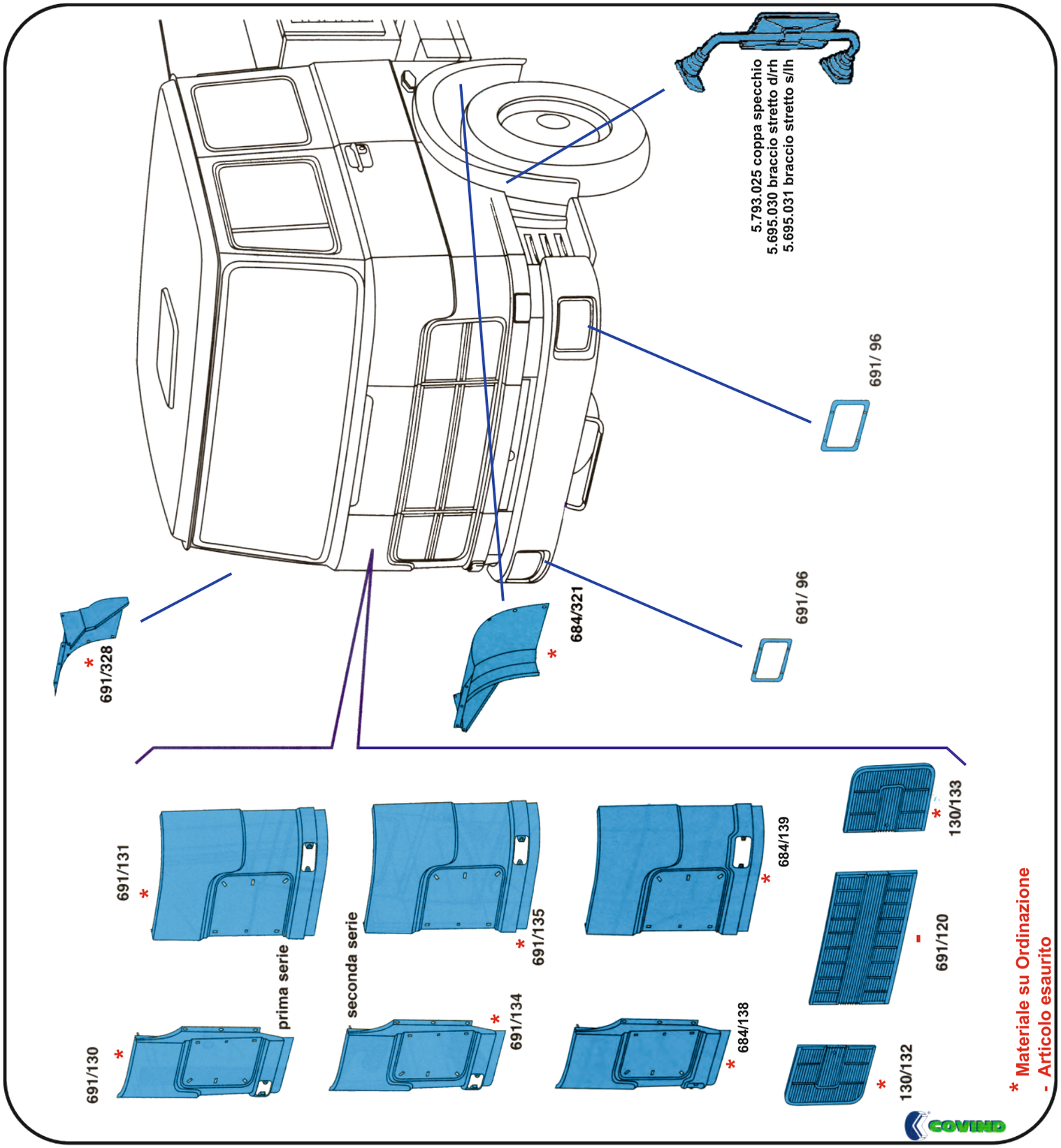

FIAT 110 - 684 - 180

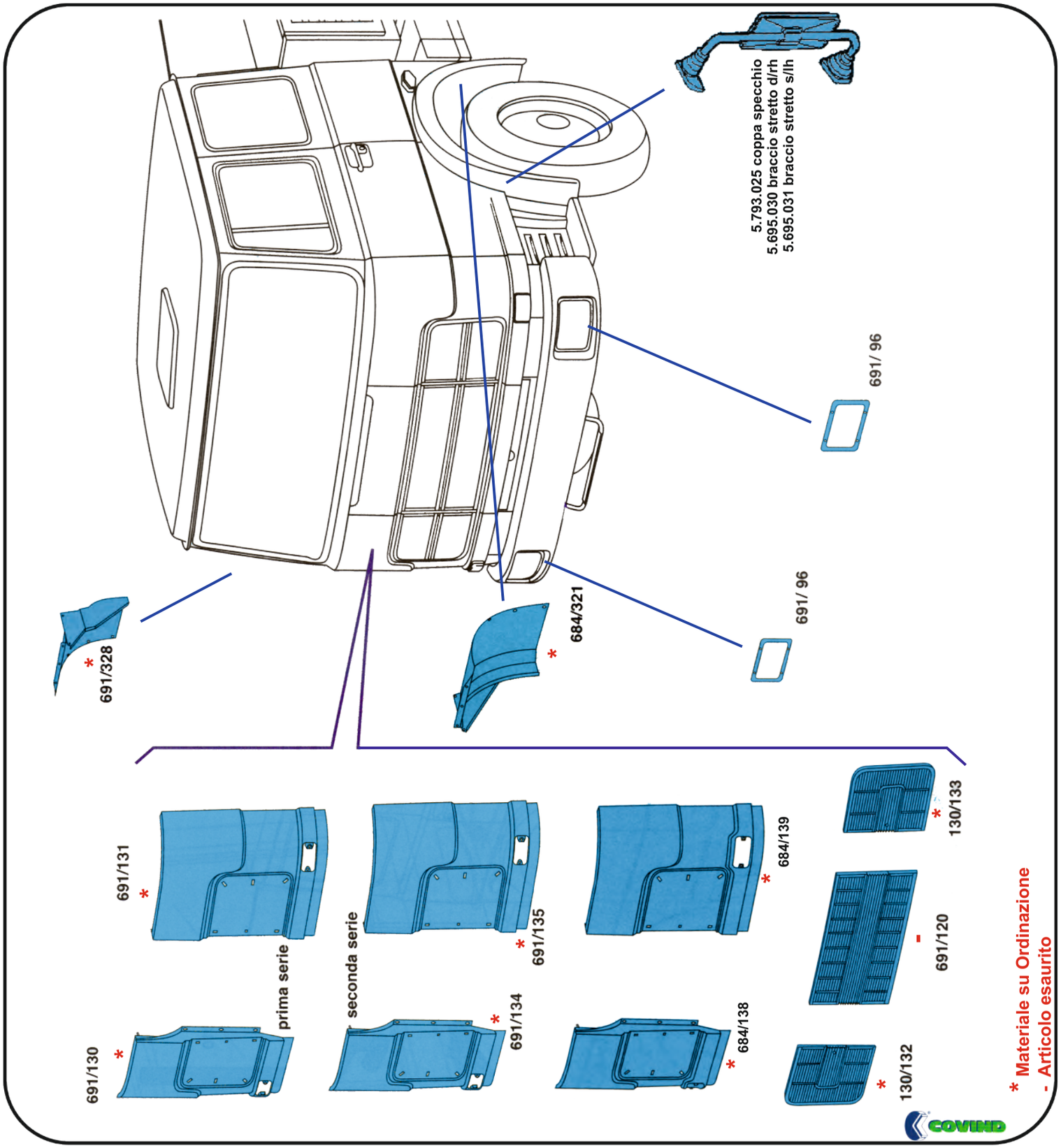

BETA RICAMBI

Tel. 081 8507823 / 8638945 - Fax 081 8500351

FIAT 190

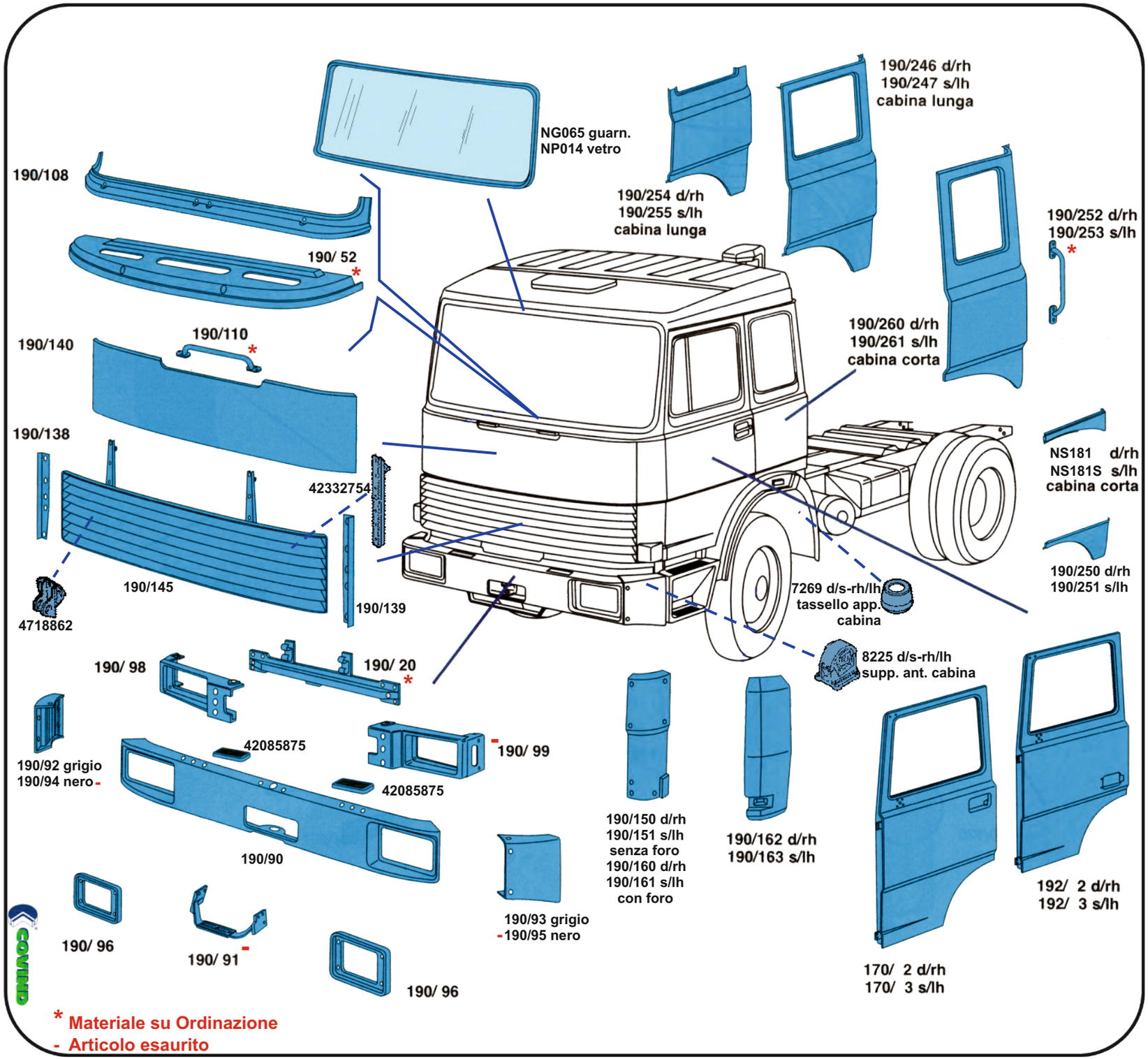

BETA RICAMBI

Tel. 081 8507823 / 8638945 - Fax 081 8500351

FIAT 190

190/320

190/28
presa aria centr.
cruscotto nera

4785277
coperchio volante

4785276
volante

NC181
cuffia leva
cambio

7820
guarn.
NV015
vetro cab.
corta
NV030
vetro cab.
lunga
d/s-rh/lh

192/250 d/rh
192/251 s/lh

NM012
portata kg. 35

190/322

190/143

192/323

190/147

190/135
d/s-rh/lh

190/321

190/323

190/144

190/100

190/124

190/101

190/230 d/rh
190/231 s/lh

190/194 d/rh
190/195 s/lh
grigio

190/123

190/125

190/206 d/rh
190/207 s/lh

190/200 d/rh
190/201 s/lh
nero

190/123

190/122

190/178 d/rh
190/179 s/lh
cab. corta
grigio

190/176 d/rh
190/177 s/lh
cab. corta
grigio

* 190/198 d/rh
190/199 s/lh

COVIND

* Materiale su Ordinazione
\- Articolo esaurito

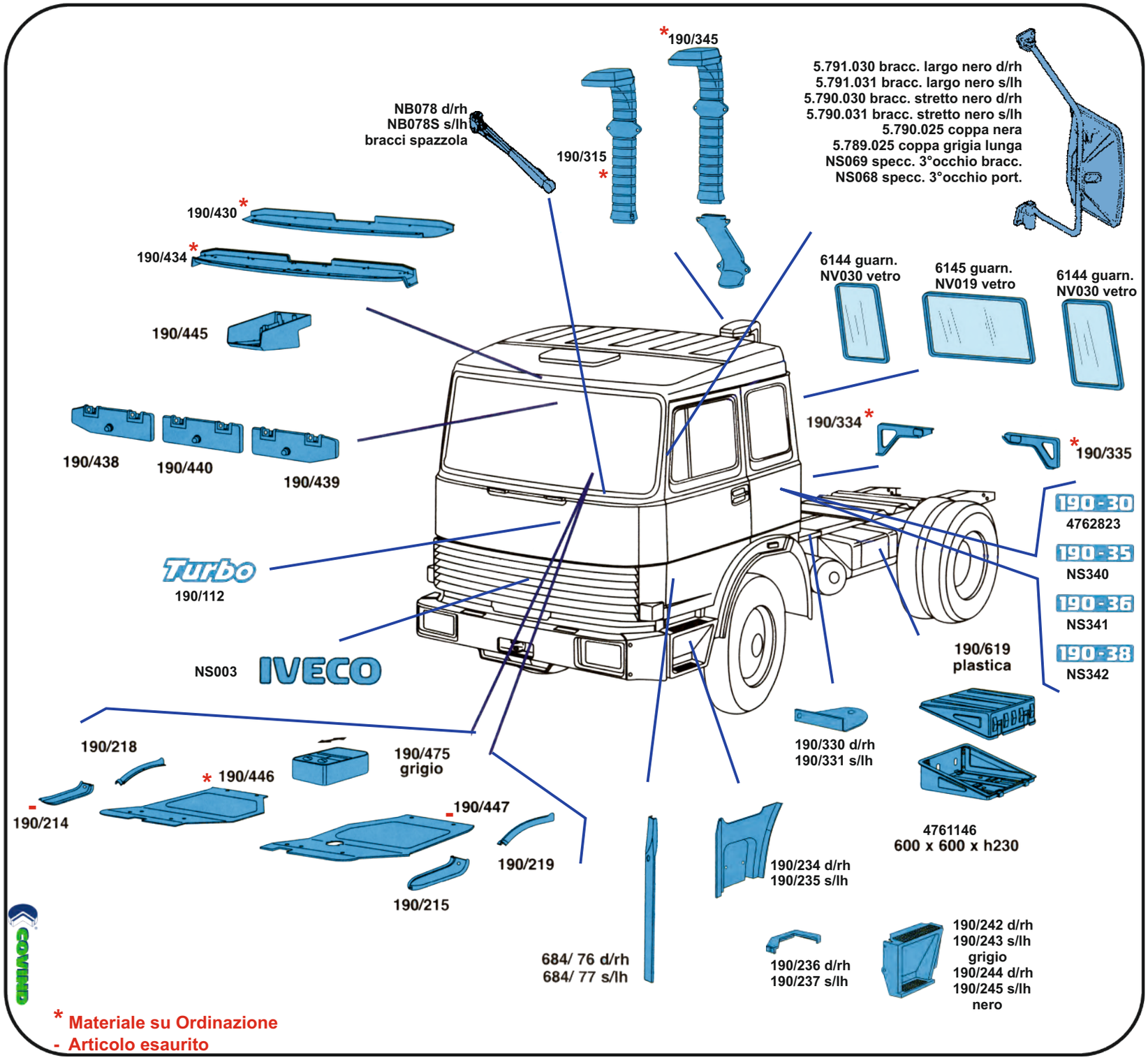

BETA RICAMBI
POMPEI s.r.l.
BETA RICAMBI
Tel. 081 8507823 / 8638945 - Fax 081 8500351

FIAT 190

BETA RICAMBI

Tel. 081 8507823 / 8638945 - Fax 081 8500351

FIAT 190

BLC9977

MAD309 d/rh
MAS310 s/lh
MAC310B coppia

4632205
spinotto corto
9074849
spinotto lungo

4632292
boccola

MAD227 d/rh nera
MAS228 s/lh nera
MAC228B coppia nera

NV027
vetro scendente

4678076
asta sicura

NR011
serie raschiavetri

684/ 1
d/s-rh/lh

684/ 13
d/s-rh/lh

684/ 14 d/rh
684/ 15 s/lh

GVI22 1°serie
GVI48 2°serie

SAD135 d/rh
SAS135B s/lh
1^serie

SAD174 d/rh
SAS174B s/lh
2^serie

SCD25 d/rh
SCS25B s/lh

AAD69 d/rh
AAS70 s/lh
1^serie

CMI20
cromata

NP100 d/rh
NP100S s/lh
amaranto
NP101 d/rh
NP101S s/lh
nero

192/18

NG033
lista taglio

NC145
d/s-rh/lh

697/100 d/rh
697/101 s/lh

190/ 17 d/rh
190/ 18 s/lh
NV033 d/rh
NV033S s/lh
vetro girevole

GLI14
d/s-rh/lh
1^serie
GLI37
d/s-rh/lh
2^serie

NA035 d/rh
NA035S s/lh
manuale
2^serie

NA001 d/rh
NA001S s/lh
elettrico c/motorino
2^serie
NA034 d/rh
NA034S s/lh
elettrico s/motorino

COVIND

TURBOTECH

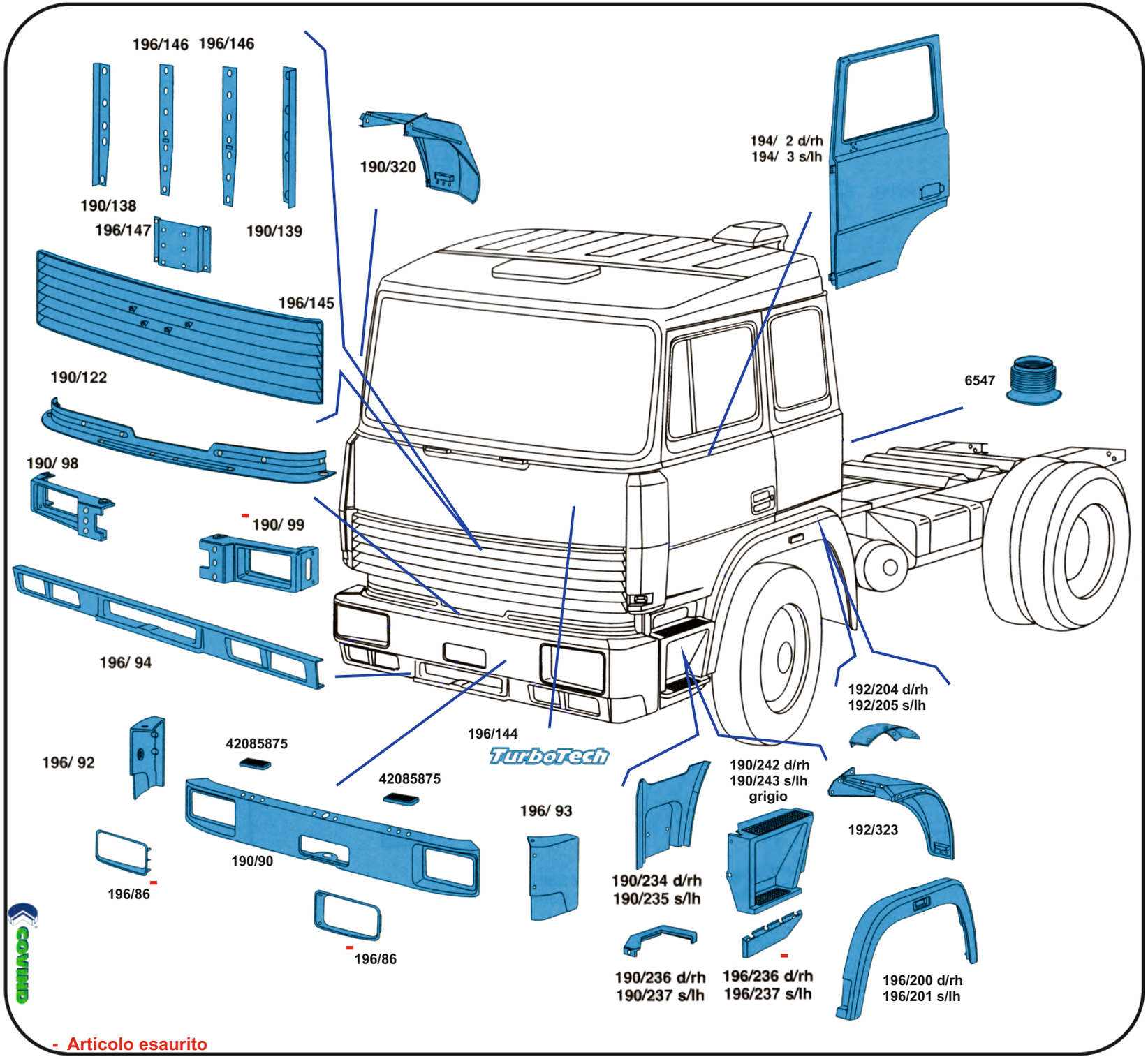
196/146
196/146
190/138
196/147
190/139
190/320
194/ 2 d/rh
194/ 3 s/lh
196/145
190/122
6547
190/ 98
190/ 99
196/ 94
192/204 d/rh
192/205 s/lh
196/144
TurboTech
42085875
196/ 92
42085875
190/242 d/rh
190/243 s/lh
grigio
196/ 93
192/323
190/90
190/234 d/rh
190/235 s/lh
196/86
196/86
190/236 d/rh
190/237 s/lh
196/236 d/rh
196/237 s/lh
196/200 d/rh
196/201 s/lh
COVIND
- Articolo esaurito

BETA RICAMBI
Tel. 081 8507823 / 8638945 - Fax 081 8500351

TURBOTECH

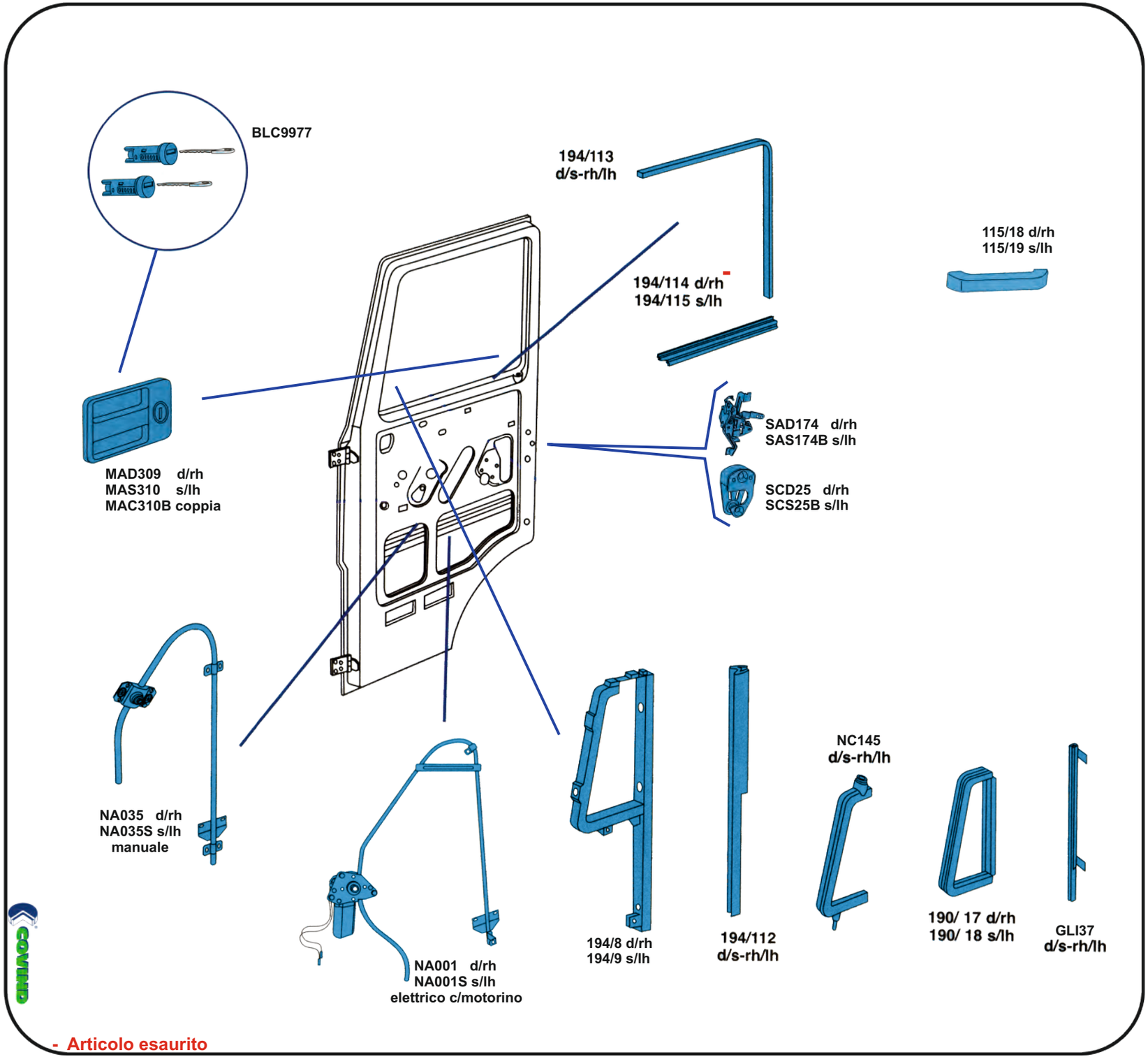

- Articolo esaurito

TURBOSTAR

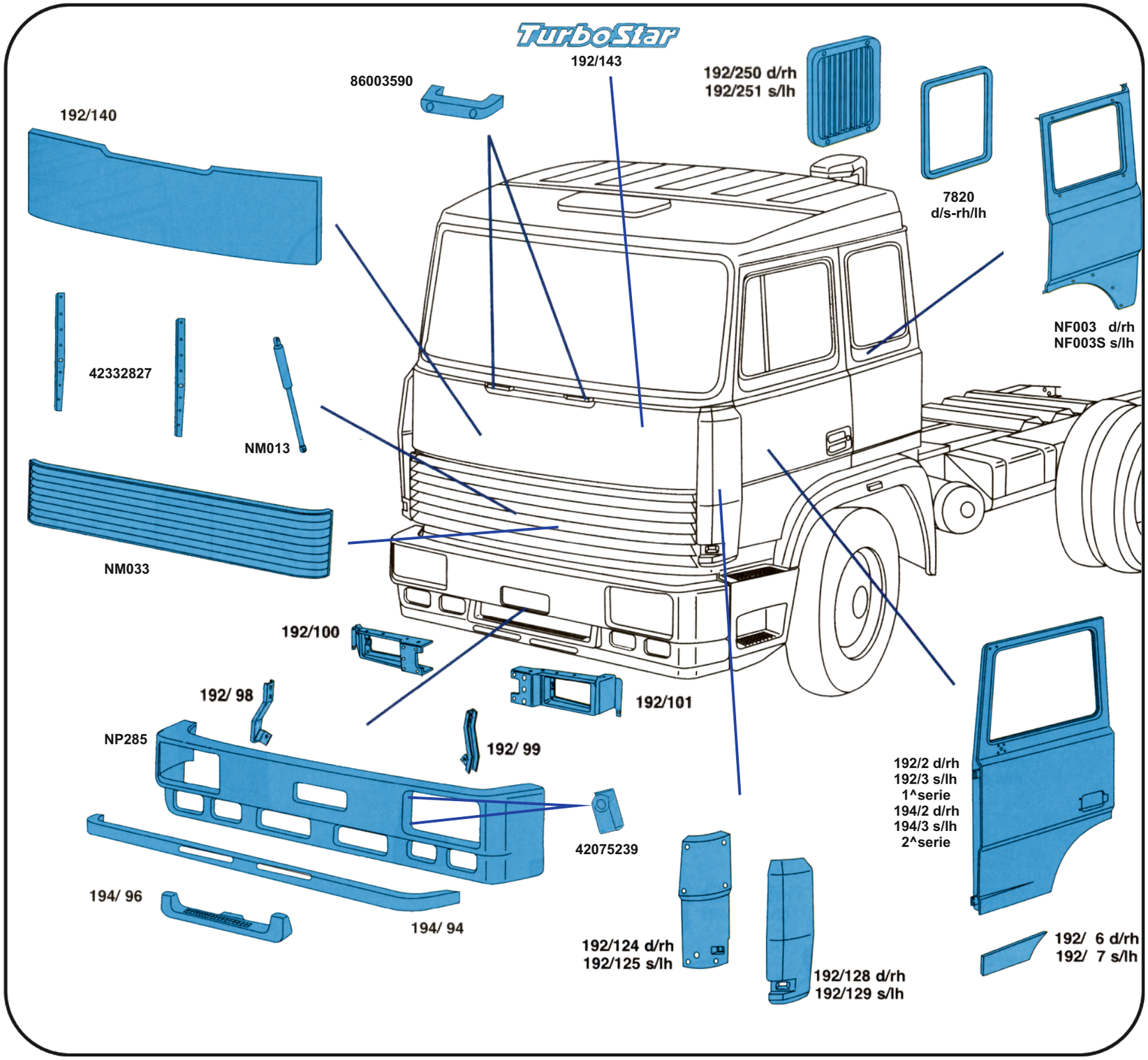
TurboStar
192/143
86003590
192/250 d/rh
192/251 s/lh
192/140
7820
d/s-rh/lh
NF003 d/rh
NF003S s/lh
42332827
NM013
NM033
192/100
192/101
192/ 98
192/ 99
NP285
42075239
192/2 d/rh
192/3 s/lh
1^serie
194/2 d/rh
194/3 s/lh
2^serie
194/ 96
194/ 94
192/124 d/rh
192/125 s/lh
192/128 d/rh
192/129 s/lh
192/ 6 d/rh
192/ 7 s/lh

BETA RICAMBI

Tel. 081 8507823 / 8638945 - Fax 081 8500351

TURBOSTAR

NP016 parabrezza
NG066 guarnizione

192/420

192/310 *

6547

NB017 bracc. 1/ser. termico d/rh
NB017S bracc. 1/ser. termico s/lh
NB031 bracc. UT termico d/rh
NB031S bracc. UT termico s/lh
NB011 coppa elettrica
NS069 specc. 3°occhio bracc.
NS068 specc. 3°occhio port.

192/520
d/s-rh/lh

192/519
d/s-rh/lh

192/518
d/s-rh/lh

684/ 76 d/rh
684/ 77 s/lh

192/122

NC077

NC077S

190 - 36
NS341

190 - 48
NS344

190 - 42
NS343

WaterCooled
NS345

194/320 d/rh
194/321 s/lh

192/204 d/rh
192/205 s/lh

192/200 d/rh
192/201 s/lh

192/316 d/rh
192/317 s/lh

190/322 d/rh
190/323 s/lh

192/230 d/rh
192/231 s/lh

192/234 d/rh
192/235 s/lh

190/234 d/rh
190/235 s/lh

NS220 d/rh
NS220S s/lh

COVIND

* Materiale su Ordinazione

BETA RICAMBI

Tel. 081 8507823 / 8638945 - Fax 081 8500351

TURBOSTAR

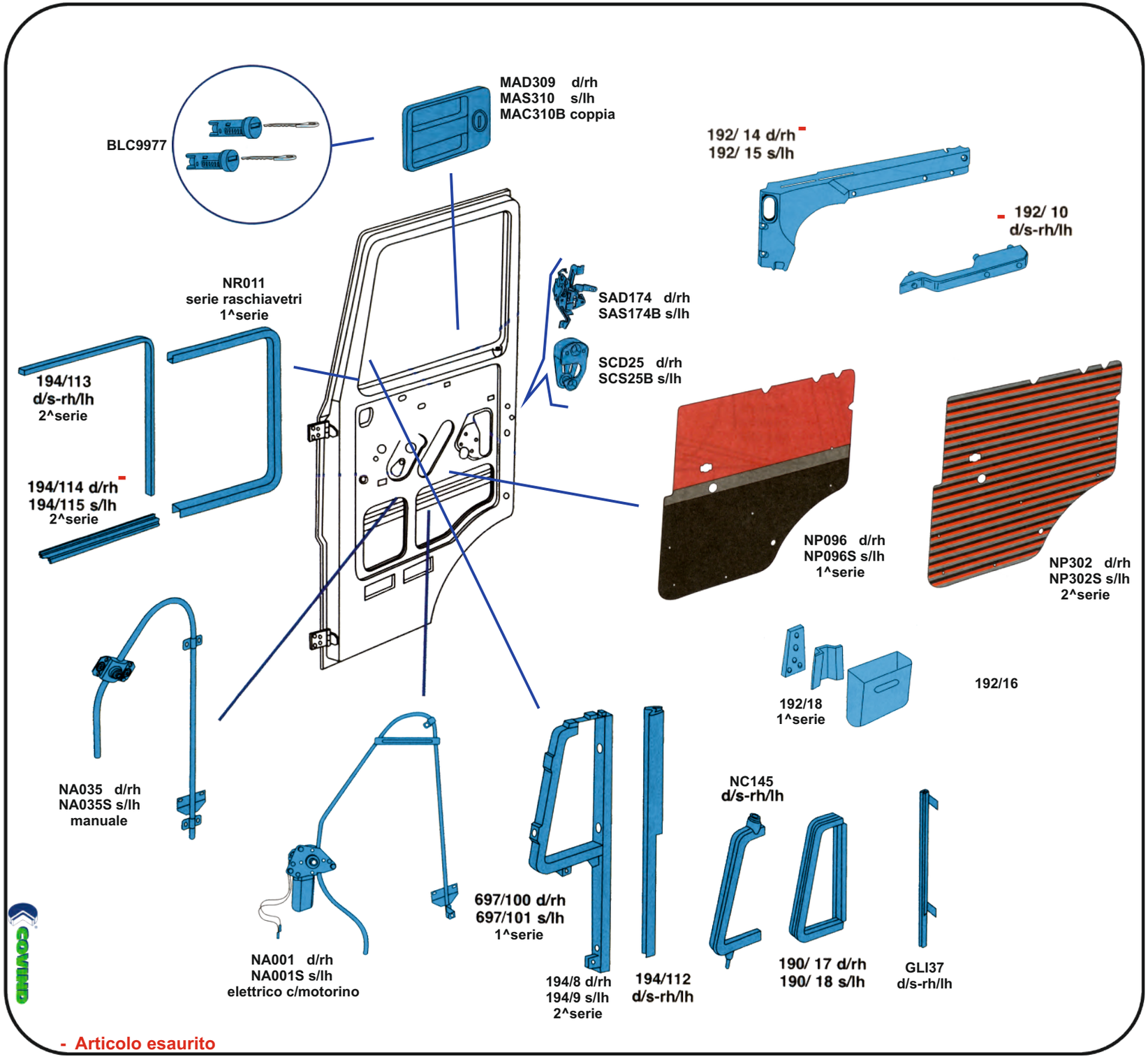

- Articolo esaurito